DocuSign Envelope ID: 9A25A4ED-27F3-44E2-8A17-5F33F1AB44B9

NOTES:

1. FOR GEOSYNTHETIC AGGREGATE BAG UNITS, SEE SPECIAL PROVISIONS.
2. INSTALL WIRE ROPE WITH A MAXIMUM VERTICAL DEFLECTION OF 6 IN. TO ALLOW FOR GEO BAG UNIT ARTICULATION.
3. EACH PILE MUST HAVE A MINIMUM OF ONE CONNECTION MADE TO EACH GE BAG UNIT LAYER.

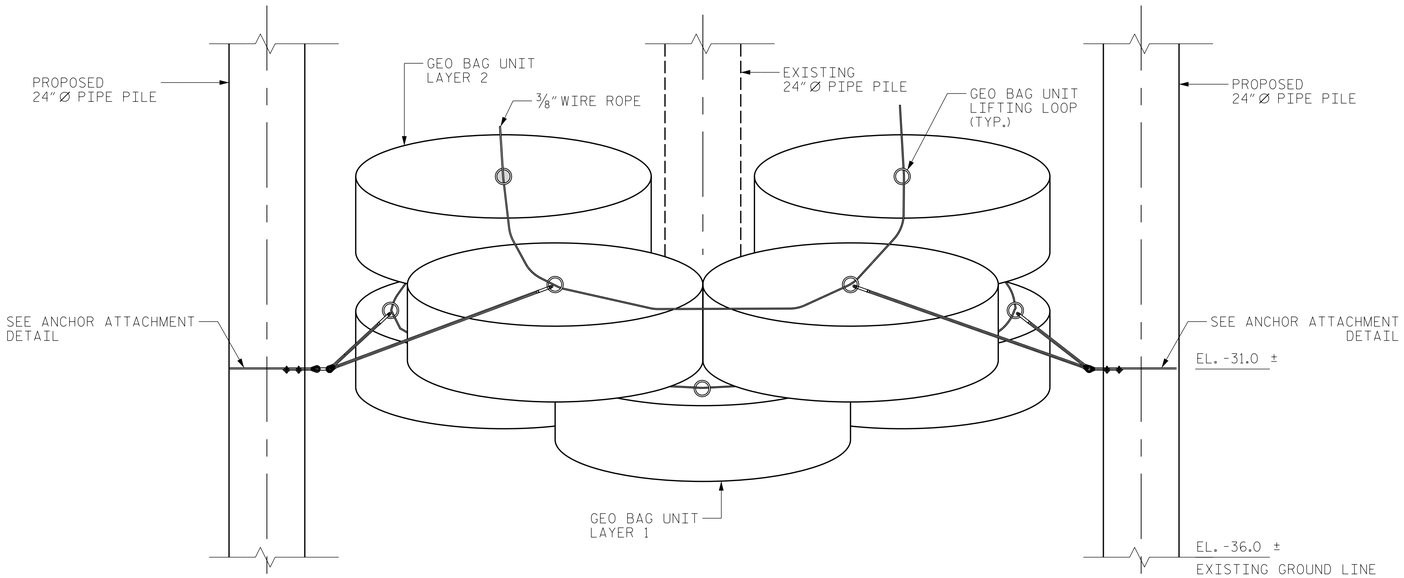

GEO BAG UNIT TIE-OFF VIEW

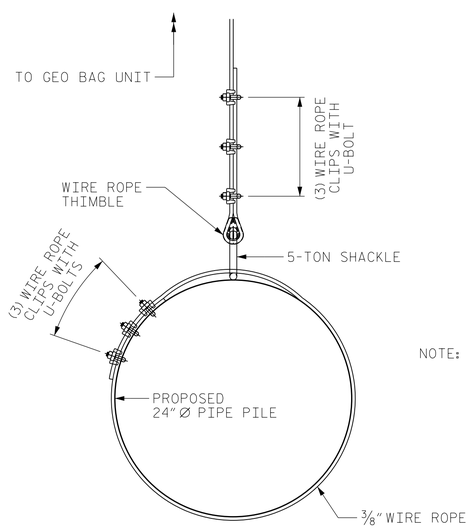

NOTE: USE SIMILAR ATTACHMENT SETUP FOR ATTACHING WIRE ROPE TO ANCHOR LINES CONNECTING GEO BAG UNITS

ANCHOR ATTACHMENT DETAIL

PROJECT NO. 105801.1027014
CURRITUCK COUNTY
BRIDGE NO. 260007
SHEET 2 OF 2

STATE OF NORTH CAROLINA
DEPARTMENT OF TRANSPORTATION
RALEIGH

SCOUR COUNTERMEASURES

DETAILS

NORTH CAROLINA PROFESSIONAL SEAL 043777 ENGINEER JACOB H DUKE
DocuSigned by: Jacob H. Duke
8/18/2021

KISINGER CAMPO & ASSOCIATES
301 FAYETTEVILLE ST., SUITE 1500
RALEIGH, NC 27601 (919) 882-7839
NC FIRM LICENSE: C-1506

DOCUMENT NOT CONSIDERED FINAL UNLESS ALL SIGNATURES COMPLETED

REVISIONS							SHEET NO.
NO.	BY:	DATE:	NO.	BY:	DATE:		S-4
1			3				TOTAL SHEETS
2			4				4

DRAWN BY :	FIDEL L. FLORES	DATE :	12/2020
CHECKED BY :	JACOB H. DUKE	DATE :	12/2020
DESIGN ENGINEER OF RECORD:	JACOB H. DUKE	DATE :	12/2020

8/18/2021
15801.1027014_SMU_B02_DET02_260007.dgn
jduke